F1225 Installation Instructions
Ford F450, F550, F600 4WD | 2017-2026
2" Front Spacer Radius Arm Kit

Read and understand all instructions and warnings prior to installation of product and operation of vehicle.

Zone Offroad Products recommends this system be installed by a professional technician. In addition to these instructions, professional knowledge of disassembly/ reassembly procedures and post installation checks must be known. Minimum tool requirements include the following: Assorted metric and standard wrenches, hammer, hydraulic floor jack and a set of jack stands. See the "Special Tools Required" section for additional tools needed to complete this installation properly and safely.

» Product Safety Warning

Certain Zone Suspension Products are intended to improve off-road performance. Modifying your vehicle for off-road use may result in the vehicle handling differently than a factory equipped vehicle. Extreme care must be used to prevent loss of control or vehicle rollover. Failure to drive your modified vehicle safely may result in serious injury or death. Zone Offroad Products does not recommend the combined use of suspension lifts, body lifts, or other lifting devices.

You should never operate your modified vehicle under the influence of alcohol or drugs. Always drive your modified vehicle at reduced speeds to ensure your ability to control your vehicle under all driving conditions. Always wear your seat belt.

Difficulty Level

Easy 1 (2) 3 4 5
Estimated installation: 3-4 hours

Tire/Wheel Fitment

N/A

» Technical Support

www.zoneoffroad.com may have additional information about this product including the latest instructions, videos, photos, etc.

Send an e-mail to ***tech-zone@ridefox.com*** detailing your issue for a quick response.

888.998.ZONE Call to speak directly with Zone tech support.

» Pre-Installation Notes

1. Special literature required: OE Service Manual for model/year of vehicle. Refer to manual for proper disassembly/reassembly procedures of OE and related components.

2. Adhere to recommendations when replacement fasteners, retainers and keepers are called out in the OE manual.

3. Larger rim and tire combinations may increase leverage on suspension, steering, and related components. When selecting combinations larger than OE, consider the additional stress you could be inducing on the OE and related components.

4. Post suspension system vehicles may experience drive line vibrations. Angles may require tuning, slider on shaft may require replacement, shafts may need to be lengthened or trued, and U-joints may need to be replaced.

5. Secure and properly block vehicle prior to installation of Zone Offroad Products. Always wear safety glasses when using power tools.

6. If installation is to be performed without a hoist, Zone Offroad Products recommends rear alterations first.

Kit Contents

***Important* Verify you have all of the kit components before beginning installation.**

Qty	Part
1	B1553 Bag Kit
2	Cam Washer: Track Bar
1	Thread Locker
1	424 Bolt Pack
	2 - 14mm-2.00 x 100mm Bolt
	2 - 9/16" SAE Washer
1	696 Bolt Pack
	2 - 8mm-1.25 x 60mm Bolt
	2 - 5/16" USS Washer, Clear Zinc
	2 - 1/4"-20 Serrated Edge Flanged Nut

Qty	Part
2	2" Coil Spring Spacer
1	1-3" Track Bar Bracket
2	1 - 1/2" Bump Stop Block

IMPORTANT

It is required that ride height measurements be taken before and after installation. Measure from the **WHEEL AXLE CENTER** up to the **FENDER LIP** of the wheel opening. Do this for all 4 wheels. Record measurements below.**

BEFORE:

*LF*_____ *RF*_____ *LR*_____ *RR*_____

AFTER:

*LF*_____ *RF*_____ *LR*_____ *RR*_____



***These ride heights will be required if you have any ride height concerns after installation. Please be prepared to provide these to Technical Support.*

PRE-INSTALLATION

1. The factory front track bar bolt requires 405 ft-lbs of torque to be installed properly. Be sure you have the means of removing and installing this hardware properly. It is possible to install the hardware and torque to a more modest range (200 ft-lbs or so) and take the vehicle to a shop with the means to torque the hardware properly immediately after the installation is complete.

2. As a result of the location of the long radius arm suspension, support locations are limited. Use your best judgment while supporting the vehicle with sufficient strength stands at appropriate locations. The radius arms will need to move freely during this installation. Recommended to lift the front of the vehicle from the front body mount (An extension may be needed)

SPECIAL TOOLS:

- Large Torque Wrench, ability to torque to 406 ft-lbs
- 30mm (1-3/16") Socket

INSTALLATION INSTRUCTIONS

1. Park the vehicle on a clean, flat surface and block the rear wheels for safety.

2. Disconnect the front track bar from the frame mount (Fig 1).

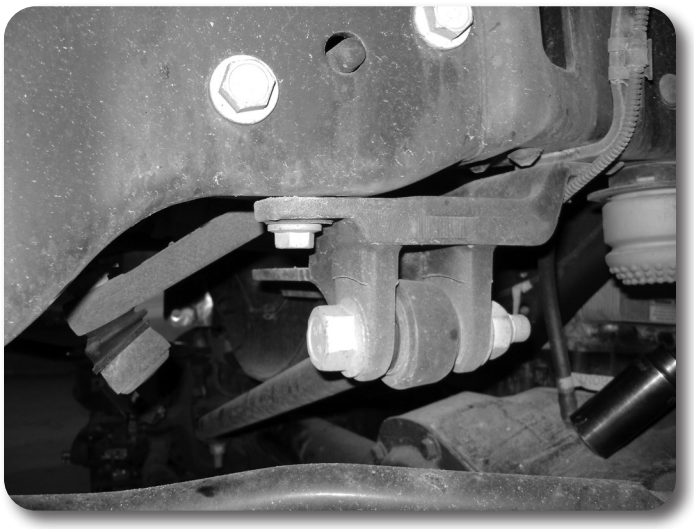

Figure 1

3. Raise the front of the vehicle and support under the frame rails with jack stands.

   Note: As a result of the location of the long radius arm suspension, support locations are limited. Use your best judgment while supporting the vehicle with sufficient strength stands at appropriate locations. The radius arms will need to move freely during this installation.

4. Remove the front wheels.

5. Support the front axle with a hydraulic jack.

6. Disconnect the sway bar links from the axle mounts. Retain hardware.

7. Remove the OE shock. Retain lower mounting hardware.

8. Disconnect the brake line bracket from the front of the coil perch (Fig 2). Retain hardware.



Figure 2

9. Free the hub vacuum line from the axle (Fig 3, 4)

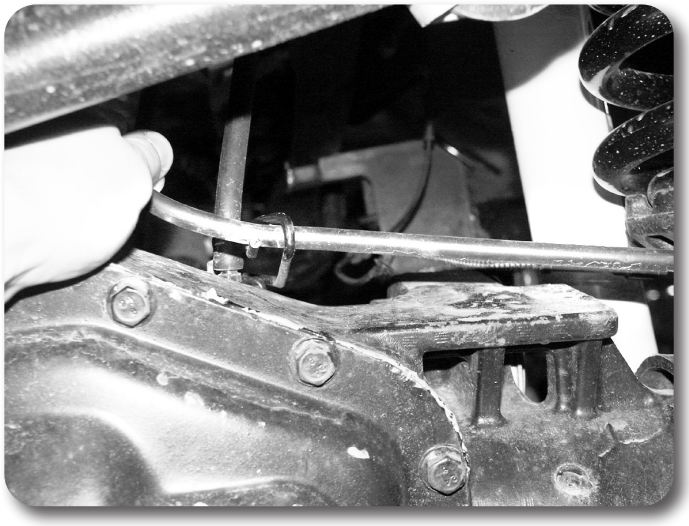

Figure 3



Figure 4

10. Lower the axle until the spring is free and remove the spring from the vehicle.

Note: Do not over extend the brake lines.

11. Remove the bolt mounting the coil perch to the axle and remove the perch from the vehicle.

12. Apply thread locker to the supplied 14mm bolt. Install the OE coil perch in conjunction with the new spacer (Fig 5) on the axle. The chamfer in the block goes toward the outside and the upper tabs nest in the recesses in the coil perch. Fasten the assembly with the 14mm x 100mm bolt and 9/16" SAE flat washer. Torque hardware to 95 ft-lbs.

Note: The coil perch is labeled "FRT" for the front side.

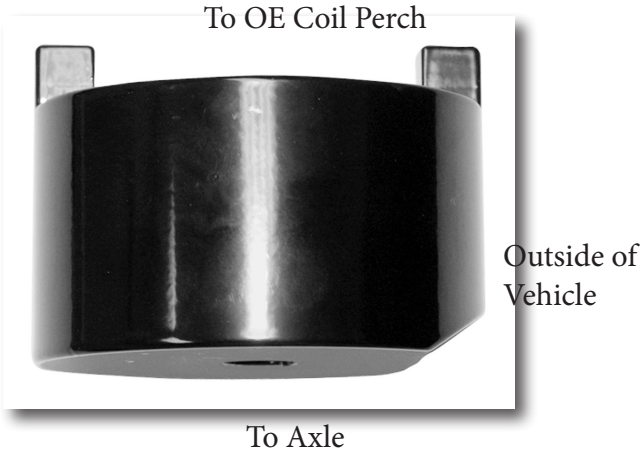

Figure 5

13. Remove the five bolts mounting the track bar bracket to the frame and remove the bracket from the vehicle (Fig 6).



Figure 6

14. Install the new bracket in the vehicle using the five original mounting holes and hardware. Torque mounting hardware to 129 ft-lbs (Fig 7)

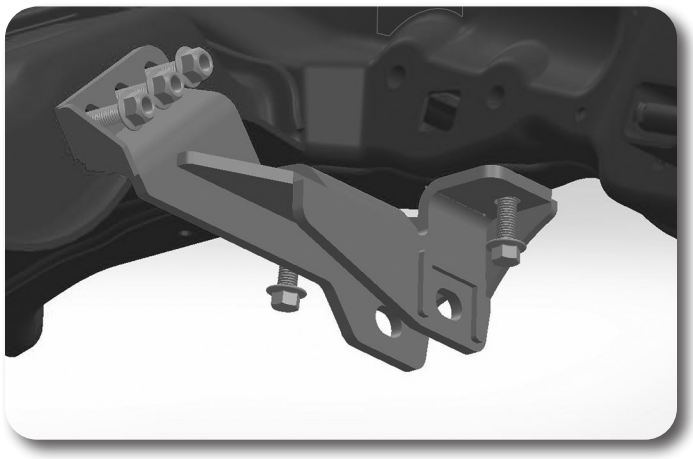

Figure 7

15. Working on one side of the vehicle at a time, remove the stock radius arm and replace with the new one. Install cams into the lower slots with new 18m hardware, and use one of the old lower 18mm nuts on the driver's side upper mount at the axle with factory hardware. Loosen the axle side hardware on the other side. Remove the lower bolt to allow the hardware to be installed on the new radius arm.

16. Install cam plates with the hole towards the rear of the vehicle.

17. Tighten the front hardware at the axle to 240 ft-lbs. Do not tighten the frame pivot hardware at this time.

18. Remove the factory bump stops, then remove the cup from the frame, discard hardware. (Fig 8a, 8b)

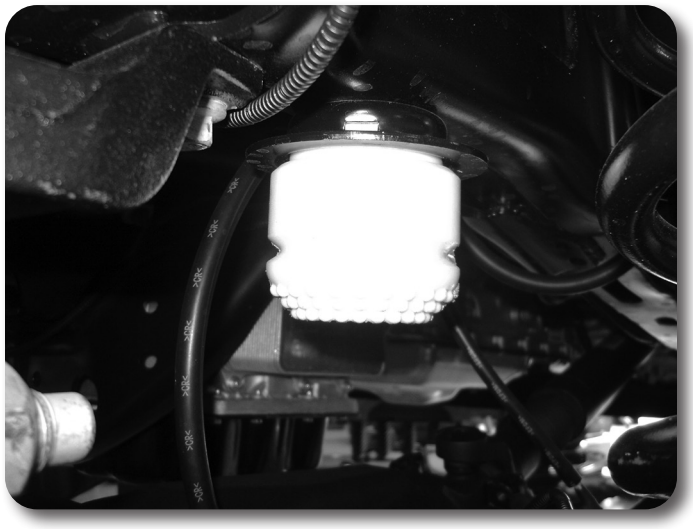

Figure 8



Figure 9

19. Install the bump stop spacer between the frame and bump stop cup with 8mm hardware (BP #696).

20. Grease the bump stops and reinstall into the factory cups. Raise the axle to get the bump stops to press into the cups if necessary. (Fig 1)

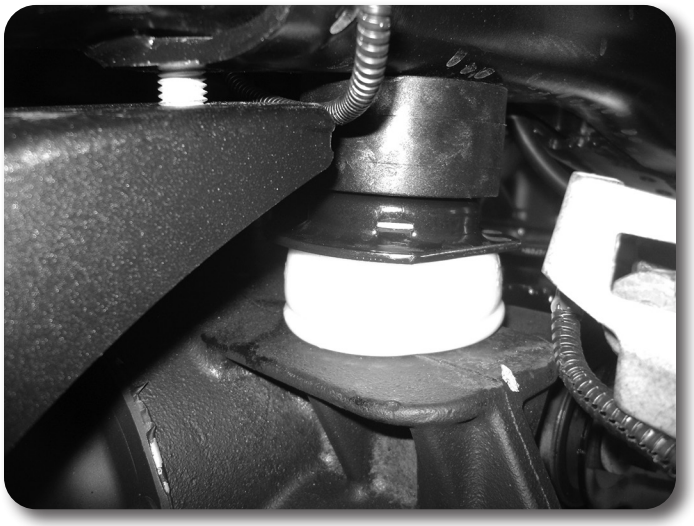

Figure 10

21. Reinstall the OE coil and index it correctly in the coil perch.

22. Attach ABS wires to the radius arm with the included zip ties and push pin zip tie where the upper mount at the axle is located.

23. Compress the coils slightly by using a hydraulic jack on the axle. Install new shocks at this time. Reattach all other brake, ABS and vacuum lines to the original locations with the OE mounting hardware. Check for adequate slack in lines.

24. Reattach the sway bar links to the axle with the OE hardware and torque to 59 ft-lbs.

25. Install the wheels and lower the vehicle to the ground.

26. Reattach the track bar with the OE hardware. Turn the steering wheel to aid in aligning the track bar in the bracket. Torque hardware to 406 ft-lbs.

Note: offset the holes in the cams can be used to adjust for ride height variance. Start with the holes closer to the passenger's side. If the axle is not centered at ride height, flip the cam plates so that the hole is towards the driver's side.



Figure 11

27. Tighten the radius arm pivot hardware at the frame to 221 ft-lbs.

28. Check all hardware for proper torque.

29. Torque lug nuts to factory specification.

30. The badge can now be riveted on to the outside faces of the radius arms using the provided 1/8" rivets. Any residue on the badge can be cleaned up using alcohol or brake cleaner before install. With the badge not installed it can be painted to what ever color you desire, or left raw as a stainless steel badge.

31. Adjust drag link to center steering wheel.

F550/F600 4" Rear Block Installation

32. Block the front wheels for safety.

33. Raise the rear of the vehicle and support with jack stands under the frame rails just ahead of the spring hangers.

34. Support the axle with a hydraulic jack.

35. Remove the factory shocks. Retain all mounting hardware.

36. Disconnect the passenger's side spring u-bolts.

37. Lower the axle and remove the factory lift block. It will not be reused.

38. Lower the axle enough to place the provided lift block between the axle and the leaf spring. Position the block so the wing faces inward. (Fig 14) Install the new provided u-bolts, washers, and 5/8" nuts. **Tighten but do not torque**: final torque will be completed with vehicle on the ground under full weight. Equal thread length should show below all four tightened u-bolt nuts. Take care not to over-extend the brake lines.



Figure 12

39. Repeat block installation on the driver's side. Take care not to over extend the brake lines.

40. If replacing shocks, install shocks now.

41. Lower the vehicle to the ground.

42. With the weight of the vehicle on the axle, torque the u-bolt nuts to 130-150 ft-lbs. The u-bolts can be trimmed to the desired length.

43. Torque lug nuts to factory specification.

44. Recheck all hardware for proper torque, check again after 500 miles and at regularly scheduled maintenance intervals. An alignment for a caster check and is now recommended, but not necessary.

Post-Installation Warnings

1. Check all fasteners for proper torque. Check to ensure for adequate clearance between all rotating, mobile, fixed, and heated members. Verify clearance between exhaust and brake lines, fuel lines, fuel tank, floor boards and wiring harness. Check steering gear for clearance. Test and inspect brake system.

2. Perform steering sweep to ensure front brake hoses have adequate slack and do not contact any rotating, mobile or heated members. Inspect rear brake hoses at full extension for adequate slack. Failure to perform hose check/replacement may result in component failure. Longer replacement hoses, if needed can be purchased from a local parts supplier.

3. Perform head light check and adjustment.

4. Re-torque all fasteners after 100 miles. Always inspect fasteners and components during routine servicing.